56946

Dexley™

Patents/Brevets/Patentes
EU/UE 000656616-0001
Canada/Canada/Canadá
CA-118893

Instructions • Instructions
Instrucciones

Product Support / Soutien au produit / Soporte al producto
1-866-755-1321

Easy assembly.

Staples is leading the way in taking some of the stress and frustration out of chair assembly.

More logical instructions. No more "huh?" moments — we develop our instructions to have the right amount of detail you'll need for easy assembly.

Have no fear. If you're confused during any step of the way, just call the number located at the bottom of the instructions pages. You'll get help from a friendly representative.

Need help with assembly?
Questions?
Call our Product Support experts
8:00 am–8:00 pm
Eastern Time: 1-866-755-1321

In-home assembly (additional fees apply)
Call our in-home assembly experts
Monday–Friday 9:00 am–7:00 pm
Saturday 9:00 am–5:00 pm
Eastern Time: 1-866-826-6622

Built to impress.

Staples® Brand chairs offer high quality at prices you'll love.

With the quality you demand and the rigorous performance testing you expect, Staples® Brand chairs are made to last and impress. Before we put our name on the box, it has to meet our highest standards — and yours.

The selection you want. You'll enjoy an ever-growing assortment of products to better meet your needs. From stylish desk accessories and organizing systems to office desks and chairs, chances are we have something you'll count on day in, day out.

The prices you'll love. Sure, high quality and wide selection are great. But the icing on the cake is our great low prices. Because Staples® Brand Products are designed to do more than fit your style — they fit your budget, too.

Sit down on the job in custom comfort.

No two people are alike. But no matter what you're built like, there's one chair that's built for everyone's comfort — the Staples® Brand chair. Take a look at the diagram below. It's packed with features that make it easy to fine-tune the comfort to meet your unique needs.

Product Features

Seat Height Adjustment

Seat height adjusts to assure correct posture and relieves stress on back, thighs and legs.

Tilt Tension

Easy adjustment of chair flexibility avoids heavy pushing and relaxes muscles.

Upright Seat Tilt Lock

Simple locking mechanism fixes seat in upright position to assure healthy posture.

Arm Height Adjustment

Arms adjust up and down or swivel to ease pressure on neck and support shoulders.

Lumbar Support Adjustment

Added cushioning in chair back provides maximum support to lower back.

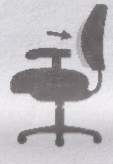

Features Instructions

Seat Height Adjustment

- To raise the seat: lean slightly forward while seated to relieve the pressure on the tilt mechanism.
- Reach under the right side of the chair and locate the handle. Raise yourself up slightly to allow the chair to reach your desired height.
- To lower the seat: remain seated and lift the handle upwards until the chair lowers to your desired height.

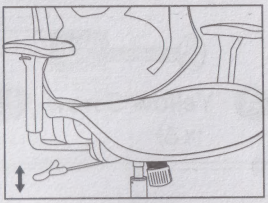

Upright Seat Tilt Lock

- Locate the handle underneath the right side of the seat.
- Pulling the handle all the way out allows the chair to tilt.
- Pushing the handle in when the chair is in the fully upright position locks the chair in place.

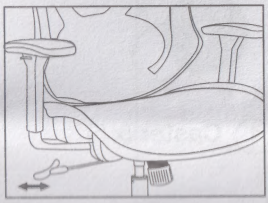

Tilt Tension

- Grasp the round cylinder knob under the front center of the seat.
- For firmer/stiffer — turn counter clockwise.
- For softer/looser — turn clockwise.

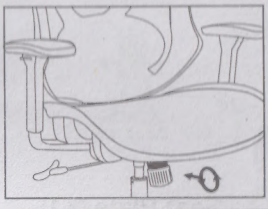

Arm Height Adjustment

- Press the buttons on the chair arms to allow the arms to move up or down freely.
- Release the buttons once the desired height is reached.

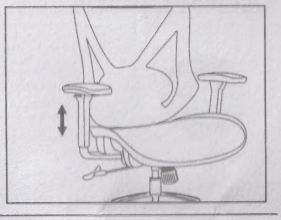

Lumbar Support Adjustment

- Slide the lumbar support up or down to the desired location.

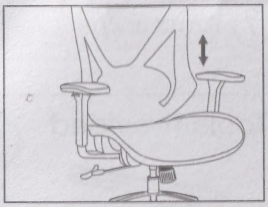

Included Parts

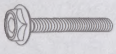

A Yellow Screw (x 6)

B Blue Screw (x 4)

C Green Screw (x 3)

D Yellow Screw (x 2)

1 Caster (x 5)

2 Base (x 1)

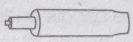

3 Gas Lift (x 1)

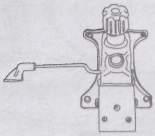

4 Seat Plate (x 1)

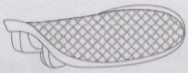

5 Seat (x 1)

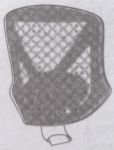

6 Back (x 1)

7 Arms (x 2)

8 Headrest (x 1)

Tools Provided

E Allen Wrench (x 1)

Chair bolts, screws and knobs may loosen during use. Please tighten your chair's hardware each month.

Each piece of hardware needed for each step is located in the corresponding segment in your Easy Parts Pack.

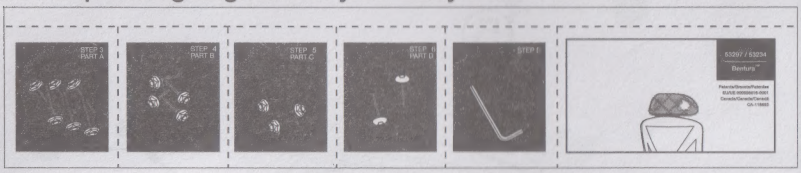

1

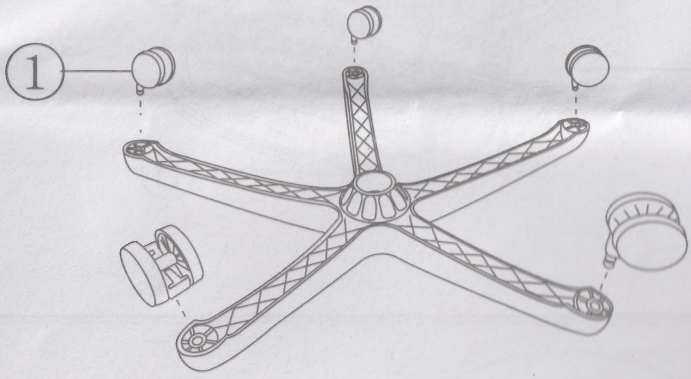

2

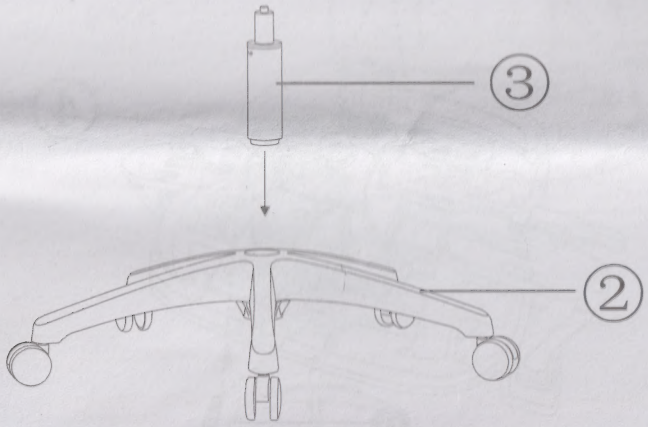

3

A (x 6)

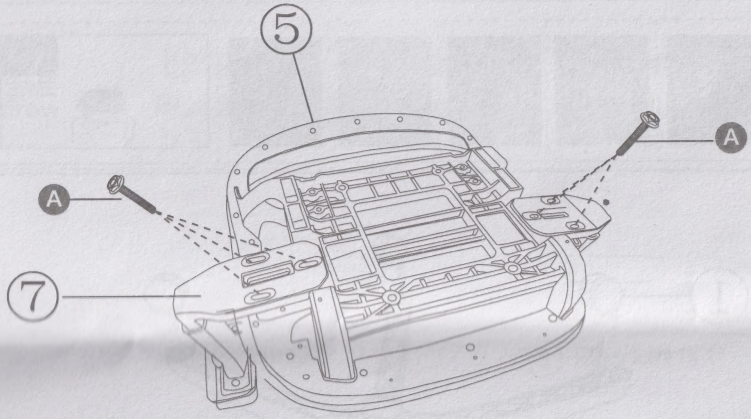

4

B (x 4)

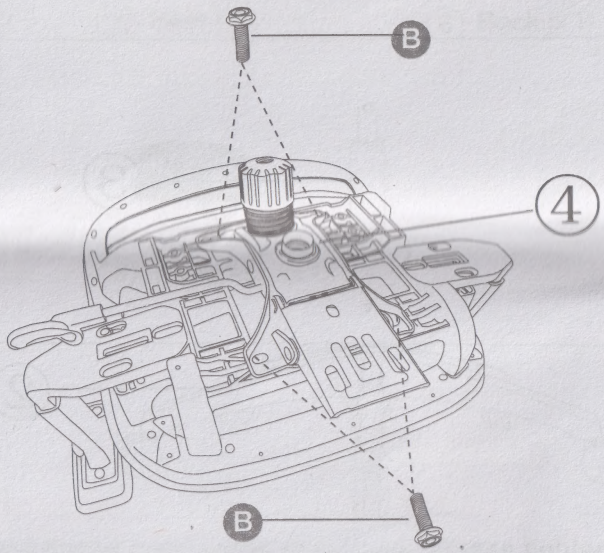

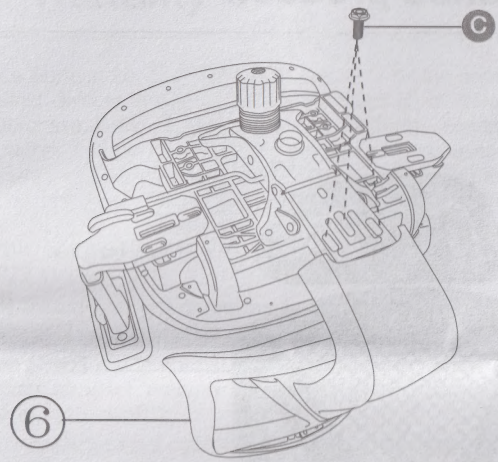

5

C (x 3)

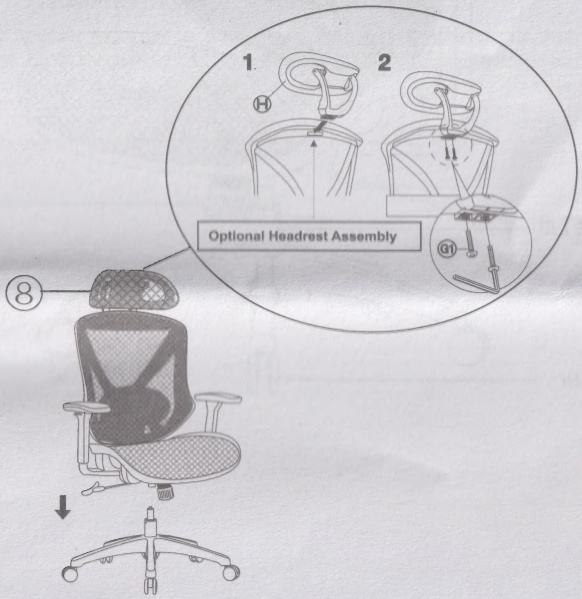

To secure seat into base, sit down on chair. See easy adjustment instructions to ensure custom comfort.

6

D (x 2)

Behold, the finished product.

Staples® Warranty

Staples the Office Superstore, LLC ("Staples") warrants to the original purchaser of this Staples® Brand Chair against defects in design, assembly, material, or workmanship for 7 years from the original date of purchase. In the event of a defect in the design, assembly, materials or workmanship of this product within 7 years from the original date of purchase, Staples will replace any such defective part. Parts included under this warranty are non-moving metal components, chair frame, pneumatic cylinder, upholstery and all other parts. To claim your replacement parts, contact product support at 1-866-755-1321. Original receipt or proof of purchase is required to obtain replacement parts. This warranty is based on up to 10 hours of continual use within a 24-hour period for users weighing up to 275 lb. (124 kgs).

Claims under this limited warranty or any implied warranty shall be limited to replacement of 100% of the chair or refund of purchase price at Staples' sole option.

This warranty does not apply to normal wear or damage from misuse, abuse, improper storage or handling, installation, accident, repair or alteration or other circumstances not directly attributable to manufacturing or material defects.

THIS WARRANTY IS EXCLUSIVE AND IN LIEU OF ALL OTHERS, WHETHER ORAL OR WRITTEN, EXPRESS OR IMPLIED. STAPLES SPECIFICALLY DISCLAIMS ANY AND ALL IMPLIED WARRANTIES, INCLUDING WITHOUT LIMITATION, WARRANTIES OF MERCHANTABILITY AND FITNESS FOR A PARTICULAR PURPOSE. IN NO EVENT WILL STAPLES BE LIABLE FOR ANY INCIDENTAL, DIRECT, INDIRECT, SPECIAL, PUNITIVE, OR CONSEQUENTIAL DAMAGES (SUCH AS BUT NOT LIMITED TO, DAMAGES FOR LOSS OF PROFITS, BUSINESS, SAVINGS, DATA OR RECORDS) RELATED TO THIS PRODUCT.

This warranty gives you specific legal rights, and you may also have other rights that vary depending upon the state, province, territory or country. Some states, provinces and territories do not allow the exclusion or limitation of incidental or consequential damages or limitation on how long an implied warranty lasts.

Except as stated herein, no other warranties shall apply.